FENSTER & TÜREN **VS**

PERGOLA SYSTEME

www.fensterturenvs.de

CONTENTS

FENSTER & TÜREN **VS**

Brings **Comfort** to Life!

SmartRoof bioclimatic pergola makes all the difference in the pergola systems, as it has been developed specifically to be an indispensable architectural piece to your living spaces.

Besides being durable and long lasting, SmartRoof provides heat and water insulation thanks to its water gutters and special gaskets. It prevents heat loss with polyurethane filling in panel cavities. It also provides sound insulation and reduces heating costs in the cold weathers.

SmartRoof Bioclimatic Pergola systems have integrated lightings that bring an elegant, modern and sophisticated look to the outdoor space. It makes life easier with its wide range of products with straight or inclined structures.

SELECT

Designed according to the modern architectural demands, Select makes a difference with its unique form wherever it's applied. Select is designed to adopt to any outdoor environment thanks to its unexampled features.

- Non-inclined structure does not cause any loss of height,
- It allows to open the ceiling completely with the retractable panel structure.

SELECT

Max. width	900 cm
Max. projection	600 cm

Fascia

Fascia

Rail

Gutter (Motor-door)

Gutter (Motor-door)

Column

PRIME

Prime is a modern bioclimatic pergola system that allows outdoor use under sunny and rainy weather conditions thanks to its movable/folding and self-rotating panels. Designed to adapt to any outdoor environment, Prime provides excellent visual and thermal comfort.

- 120 degree rototable.

PRIME

Max. width	400 cm
Max. projection	600 cm

Panel

Panel

Gutter (Waterdrain)

Lighting

Column

R160

SmartRoof R160 is designed to bring a new lease of life to the outdoor spaces with its unique design concept and geometrical form. While providing the optimum solutions, the R160 meets various architectural needs with inclined roof option models with rotation feature.

R160

Max. width	1200 cm
Max. projection	600 cm

Panel

Panel

Rail

Gutter (Motor-door)

Gutter (Motor-door)

Column

R200

The SmartRoof R200 is designed specifically for wide open spaces and has a modern geometrical look inspired by unique asymmetrical lines. R200 allows you to enjoy your interior space thanks to its inclined structure. Moreover, it demonstrates a high durability under snowfall.

- Recommended for the areas with at least 600 cm projection.

R200

Max. width	800 cm
Max. projection	700 cm

Panel

Panel

Rail

Gutter (Water-drain)

Gutter (Water-drain)

Column

EXOL
MICKEY'S
ARABICA
COFFEE HOUSE
gelato
ARABICA
ARABICA
Kocatepe
1949
Cafe & Restau

LIGHTING

Depending on whether you want strong practical lighting or an atmospheric dimmed ambience, be sure to make use of Byart's linear RGB alternative LED Technology. You can dim the light directly from your remote control.

FENSTER & TÜREN **VS**

Brings **Confidence** to Life!

PergoLine is an ergonomic, functional and advanced technological awning system, which can be opened and closed automatically for seasonal weather conditions.

PergoLine is made out of extruded aluminum and painted with epoxy polyester. It has a static carrying strength without needing any extra wood or steel construction.

BRONZE

The posted structure of the Bronze allows closing the side areas with VertiGlass vertical automatic glass systems or heat-insulated fixed systems. In this way, the effects of adverse weather conditions are reduced and you can enjoy an extended living space for many years to come. It's an ideal solution for private dwellings and confined spaces with its 600 cm projection.

BYART

BRONZE

	Max. width	Max. projection
Single Form	450 cm	600 cm
Double Form	600 cm	600 cm
Triple Form	1200 cm	600 cm

Fabric Profile

Fabric Profile

Rails

Extruded Frontal Gutter (Waterdrain)

Pole

GOLD

Gold has an automatic folding function. Its folding and rail system features offer a space for summer and winter use with a maximum projection of 900 cm. Pergoline Gold, is suitable to be used under adverse weather conditions without any carrier, thanks to its poled structure and wide projection.

BANG BURGER

GOLD

	Max. width	Max. projection
Single Form	450 cm	900 cm
Double Form	600 cm	900 cm
Triple Form	1200 cm	900 cm

Fabric Profile

Fabric Profile

Rail

Extruded Frontal Gutter (Waterdrain)

Pole

DIAMOND

Diamond is a professional Pergola Systems solution and an advanced technology pergola system developed for large areas with a maximum projection value of 1200 cm. The innovative Diamond product is designed to work without intermediary pillars or any extra posts. It serves as a shade for businesses with wide open spaces such as restaurants and hotels. The product can resist weights without any support.

DIAMOND

	Max. width	Max. projection
Single Form	450 cm	1200 cm
Double Form	600 cm	1200 cm
Triple Form	1200 cm	1200 cm

Fabric Profile

Fabric Profile

Rail

Extruded Frontal Gutter (Waterchannel)

Rail

RUBY

Ruby awning is specifically designed to give an aesthetic look to exterior facades. Its outstanding design and one of a kind technology brings a modern look to every place. The non-inclined structure of Ruby creates a wider use of your area and it prevents narrowing your space too. The side gutters provide a higher level of insulation.

STARBUCKS

Newcastle

RUBY

	Max. width	Max. projection
Single Form	450 cm	600 cm
Double Form	600 cm	600 cm

Fabric Profile

Fabric Profile

Rails

Extruded Frontal Gutter (Waterproof)

Fob

MÜDAVİM
Pide Salonu

RUBY+

Ruby Plus stands out with its functional features and aesthetic looks. It is one of the most capable members of the PergoLine family. The fascinating design of Ruby Plus brings a different standpoint to the world of awnings. The non-inclined structure offers solutions without narrowing your space. The side gutters also provide high insulation.

RUBY+

	Max. width	Max. projection
Single Form	450 cm	600 cm
Double Form	600 cm	600 cm

Fabric Profile

Fabric Profile

Rails

Extruded Frontal Gutter (Water-drain)

Rails

SAPPHIRE

Sapphire is an ergonomic retractable pergola system that hangs straight with no need for any post. Sapphire offers comfortable living spaces with its easy to use automatic folding function. It is suitable for residential buildings with its up to 600 cm projection.

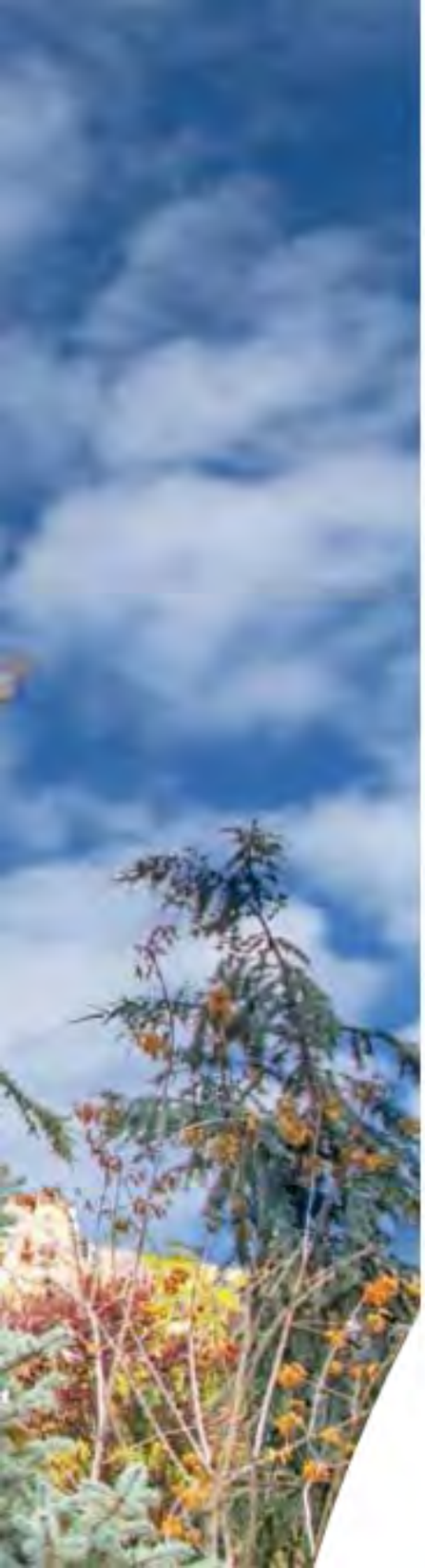

SAPPHIRE

	Max. width	Max. projection
Single Form	450 cm	600 cm
Double Form	600 cm	600 cm
Triple Form	1200 cm	600 cm

Fabric Profile

Fabric Profile

Rails

Extruded Frontal Gutter (Water-drain)

SAPPHIRE+

Designed to create more pleasant living spaces, Sapphire Plus is adaptable to any environment with its oval and folding structure up to 600 cm. Sapphire Plus offers the ability to work in single, double and triple forms. It's able to provide necessary infrastructure for any solution.

SAPPHIRE+

	Max. width	Max. projection
Single Form	450 cm	600 cm
Double Form	600 cm	600 cm
Triple Form	1200 cm	600 cm

Fabric Profile

Fabric Profile

Rails

Extruded Frontal Gutter (Motor-down)

ECO SHELL

Eco Shell offers a superior quality and ease of use. Its oval structure brings in an architectural appeal to wherever it's applied. Eco Shell is budget friendly option to create spacious environments. It brings an aesthetic appeal to living spaces and offers comfortable solutions with its unique design.

ECO SHELL

	Max. width	Max. projection
Single Form	450 cm	900 cm
Double Form	600 cm	900 cm
Triple Form	1200 cm	900 cm

Fabric Profile

Fabric Profile

Rail

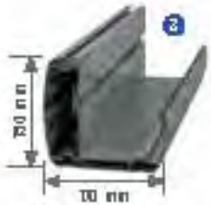

Extruded Frontal Gutter (Motorized)

Pole

SHELL

Shell is equipped with state-of-the-art, superior quality awnings. It has different forms according to the number of poles, motor and control units. Its oval structure blends in perfectly with the neighboring architecture. It can also be preferred for spacious interiors. The maximum projection is up to 900 cm and it makes Shell the smartest pergola system for cozy spaces. You don't need use of building license for it.

GREATNESS
N EVERY DROP

SHELL

	Max. width	Max. projection
Single Form	450 cm	900 cm
Double Form	600 cm	900 cm
Triple Form	1200 cm	900 cm

Fabric Profile

Fabric Profile

Rafter

Extruded Frontal Gutter (Water-Holder)

Pole

SHELL+

Shell Plus has an oval structure that can be projected up to 1000 cm to create wide open spaces for the professional enterprises. It is resistant to all weather conditions with no need for any additional carrier. The secret that lays behind its ability to be used in a wide space without any carrier is the technology that supports it. It is appropriate to cover the side areas with folding and heat-insulated aluminum joineries. Pergola Systems use blackout fabric for protection against the sun, rain and wind. It is also flame resistant. Therefor business owners chose it for these functional solutions.

SHELL+

	Max. width	Max. projection
Single Form	450 cm	1000 cm
Double Form	600 cm	1000 cm
Triple Form	1200 cm	1000 cm

Fabric Profile

Fabric Profile

Rafter

Extruded Frontal Gutter (Waterchannel)

Post

ECO PEARL

Eco Pearl is specifically designed to give a new lease of life to your space thanks to its product aesthetics, innovative concept and unique design. Eco Pearl minimizes the effects of adverse weather conditions and creates external living spaces to be used for many years to come. Technical specifications are customizable for private dwellings and narrow spaces alike.

ECO PEARL

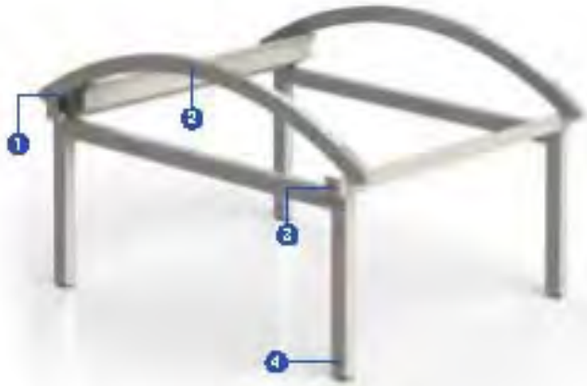

	Max. width	Max. projection
Single Form	450 cm	900 cm
Double Form	600 cm	900 cm
Triple Form	1200 cm	900 cm

Fabric Profile

Fabric Profile

Rails

Extruded Frontal Gutter (Water-drain)

Rails

PEARL

Pearl creates living space for all the seasons. It can be positioned on its own feet without any need for extra fittings. 900 cm wide projection and oval appearance offers numerous usage purpose that might meet many needs all at the same time.

GÜNAYDIN

Behzat
et-balık-mangal
Behzat
Behzat
Behzat

PEARL

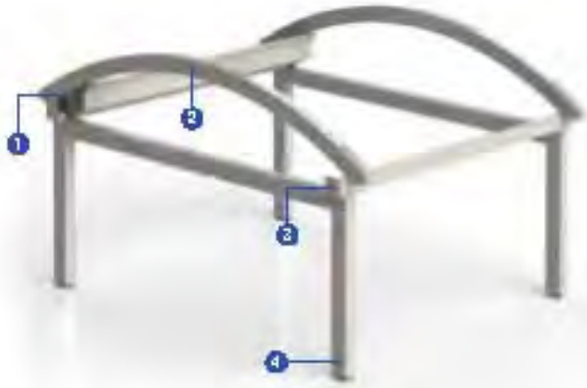

	Max. width	Max. projection
Single Form	450 cm	900 cm
Double Form	600 cm	900 cm
Triple Form	1200 cm	900 cm

Fabric Profile

Fabric Profile

Rail

Extruded Frontal Gutter (Waterproof)

Fab

PEARL+

Pearl Plus, is an outstanding implementer of open space Folding Rail Awning solutions in large areas with a maximum projection of 1000 cm. It is capable of carrying without any need of extra support under adverse weather conditions. All static measurements of the product are done. It can be constructed in single, double or triple form. This product comes with one or two motors according to your preferred size. You can use the remote control or the control unit to operate its motors.

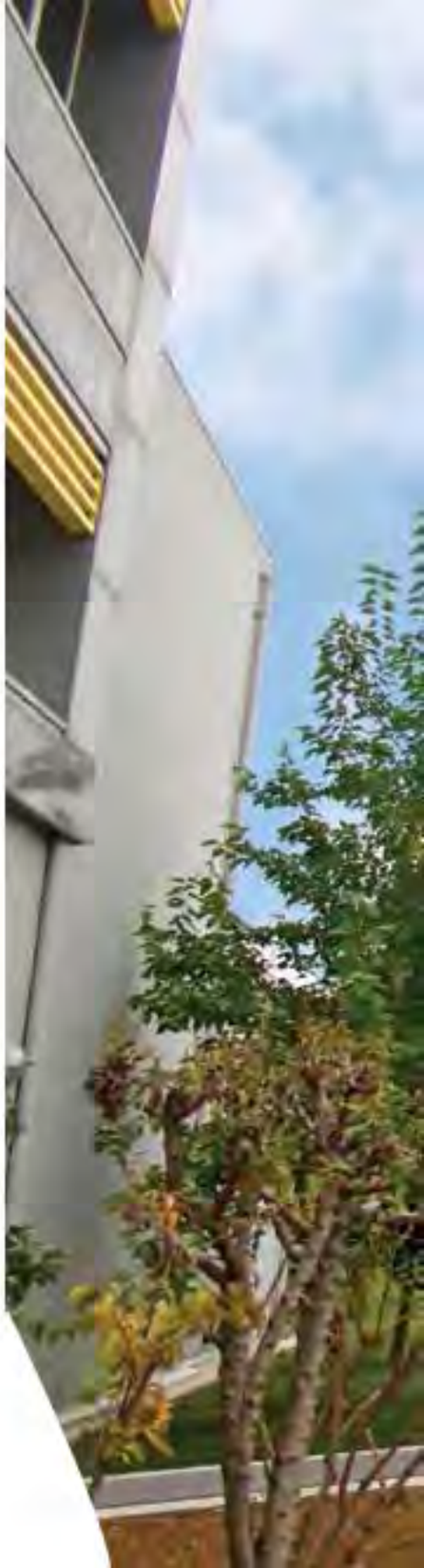

PEARL+

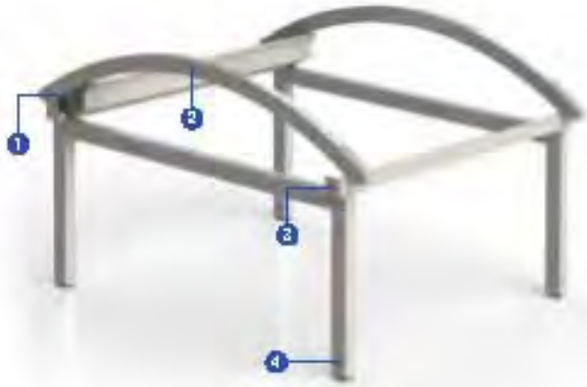

	Max. width	Max. projection
Single Form	450 cm	1000 cm
Double Form	600 cm	1000 cm
Triple Form	1200 cm	1000 cm

Fabric Profile

Fabric Profile

Rail

Extruded Frontal Gutter (Waterchain)

Pole

AMETHIST PARK SYSTEM

Byart Group adopted a modern and functional design as a creation principle. That's how Amethyst Parking System is born to protect vehicles from adverse weather conditions. This ergonomic system is a fruit of Byart Group experience and quality. It brings seasonal comfort to new generation car parking systems. Its single, double and triple form provide a watertight structure and protection against sun and wind under its 500 cm expendable structure.

AMETHIST PARK SYSTEM

	Max. width	Max. projection
Single Form	300 cm	500 cm
Double Form	600 cm	500 cm
Triple Form	900 cm	500 cm

Fabric Profile

Fabric Profile

Rib

Rib

VertiGLASS
AUTOMATIC GLASS SYSTEMS

Brings **Cosy** to Life!

VertiGlass is designed and manufactured with advanced technology to transform outdoor spaces into modern architectural and aesthetic structures. It offers a harmony of luxury and functionality at its best.

Thanks to the easy installation and minimalist design, it ensures an efficient use of spaces with its vertical operation feature. And that brings an aesthetic appearance by adapting perfectly to many areas used for private or commercial purposes such as restaurants, terraces and balconies.

Byart Group offers you the perfect combination of all pergola systems for more modern and aesthetically pleasing spaces.

TRIPLEMOTION

TripleMotion glass panels are a new generation of glass system. They transform the outdoor living spaces into more convenient ones with a modern touch. TripleMotion consists of 3 modules; one third of which is a fixed parapet while the other two thirds are movable glasses. The aluminum frame feature makes it a strong structure.

- Glasses are 8 mm thick and tempered.
- Maximum Width 3000 mm.
- Maximum Height 3000 mm.
- Fully Insulated.
- 1/3 of the total height is fixed and 2/3 is movable.
- The DoubleMotion system contains a Somfy brand electric motor. It has a remote control with radio signal transmitter.
- 100% watertight.
- No lock needed for safety of wherever it's applied.
- Wide range of printable colors and logos.

DÜVEROĞLU
1963

TRIPLE MOTION

Width (mm):	1000, 1500, 2000, 2500, 3000
Height (mm):	1000, 1500, 2000, 2500, 3000

Ali Efendi
DÖNER & LAHMACUN
Ali Efendi
ZARA
METROMALL

WYNDHAM

DOUBLEMOTION

DoubleMotion is a durable, functional and fully insulated system developed for ease of use in living spaces. DoubleMotion is ideal for pillared structures. It is the half fixed and half movable in height. Motorized system makes each module independently controllable. Lack of an aluminum frame adds a wider appearance to the space.

- Ideal for closed areas ceilings higher than 2500 mm Applicable for areas up to 3000 mm high.
- Bottom half is fixed and the top is movable vertically.
- The movable glass is 10 mm float and tempered.
- The DoubleMotion system contains a Somfy brand electric motor. It has a remote control with radio signal transmitter.
- DoubleMotion system is insulated. Movable glass is stored next to the outer part of fixed glass
- Movable glass can be kept at any desired height. Each and every movable glass can be rapidly raised in tandem.
- 100% watertight.
- No lock needed for safety of wherever it's applied.
- Wide range of printable colors and logos.

MARKS &
SPENCER
Coffeemania
Boutique
Coffeemania

Delipan's

DOUBLE MOTION

Width (mm):	1000, 1500, 2000, 2500, 3000
Height (mm):	1000, 1500, 2000, 2500, 3000

SINGLE MOTION

SingleMotion offers modern lines, practical use and elegance. It can be used both as a railing and a windbreaker. SingleMotion's motorized system can lift the 1100 mm parapet module up to 1900 mm for a perfect fit for your living space.

- Each system can be operated independently.
- Can be stopped at the desired height.
- 10 mm thick Tempered Glass.
- French Somfy Motor.
- 8 mm gap between two systems.
- Wide range of printable colors and logos.

midpoint
midpoint
midpoint

SINGLE MOTION

Width (mm):	1000, 1100, 1200, 1300, 1400, 1500, 1600
Height (mm):	190

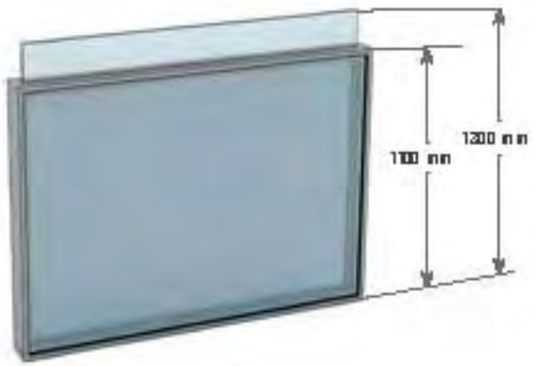

LIFT MOTION

LiftMotion can be easily integrated into existing structures with its simple and stylish design. LiftMotion and other Byart Group products go well together. It brings unique architectural solutions to wherever it's applied.

LiftMotion's height-adjustable unique design maximizes your use of terraces and patio. You will be able to cut the wind just in seconds.

- Manually operated.
- Each system can be operated independently.
- Can be stopped at the desired point.
- Fixed modules 8 mm - Movable modules 6 mm thick.
- Wide range of printable colors and logos.

MICKEY'S

DOUBLE MOTION

Width (mm):	1000, 1500, 2000, 2500, 3000
Height (mm):	1000, 1500, 2000, 2500, 3000

STRUCTURE COLORS

STANDARD COLORS

ALTERNATIVE COLORS

STANDARD FABRIC COLORS

B 8118/1622

B 8118/9002

B 8118/7500

B 8118/7024

B 8118/6026

B 8118/7999

Ferrari 602 Beige

Ferrari 602 Gray

Ferrari 602 White

Ask your supervisor for alternative fabrics.

OUR DOCUMENTS

FENSTER & TÜREN VS

OUR PARTNERS

somfy PARTNER

SIOEN

Serge Ferrari

FENSTER & TÜREN **VS**

PERGOLA SYSTEME

FensterTurenVS.de
Adresse
Mühlweg 70 78054 VS Schwenningen
Telefon
+49 1732909858
Email
info@fensterturenvs.de